PILOT CONTROL IS RELAY MODEL I-D

Application

The Bramco i-D has been designed to monitor the continuity of the Earth Circuit in a supply cable by grounding the pilot core via a diode, polarised positive to earth, and to allow remote start/stop operation by momentarily shorting a 100 Ohm resistor in the pilot circuit (which closes the relay) and opening the pilot with a stop button to open the relay.

The i-D Offers:

- Remote start/stop via pilot wire
- Detection of pilot wire shorted to earth
- LED indication of power on
- LED healthy indication when earth continuity of pilot is below 45 Ohms
- Higher (non-approved) maximum resistance range available to special order

Specifications

Supply
- 110vAC 50/60Hz standard
- 240vAC 50/60Hz optional
- 24vAC or DC 50/60Hz optional
- 48vDC 50/60Hz optional

Voltage Tolerances
- -30% to +20%

Operational
- from 0 to 145 Ohms, 100 Ohms start resistance drop

Pilot Wire
- Diode termination to earth at remote end of cable and 100 Ohm for start/stop circuit

Relay Contacts
- 2 pole changeover 5A-240v intrinsic safety rating - 100vA

Base Mounting
- DIN rail or screw down

Materials
- High impact poly carbonate

Bramco Contacts

Bramco International
16 Templar Place
Bennetts Green 2290
www.bramco.com.au

Telephone (02) 49544721
Email info@bramco.com.au

PROUDLY AUSTRALIAN MADE AND OWNED SINCE 1945

Typical Installation

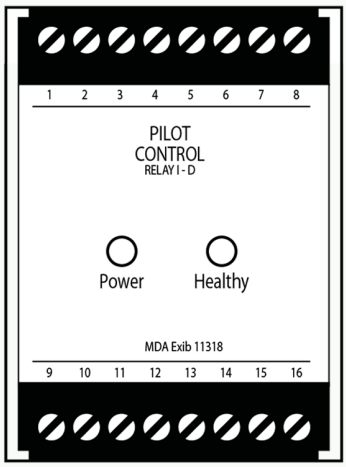

Ordering Information

Order Codes:

A00251	110vAC
A00938	240vAC
A00253	24vAC/DC

Approvals/ Conformance's

N.S.W Mines MDA EXib 11318
QLD Mines QMD 947347X
AS 2081:2-1988 Compliant

Outline and Mounting Hole Dimensions

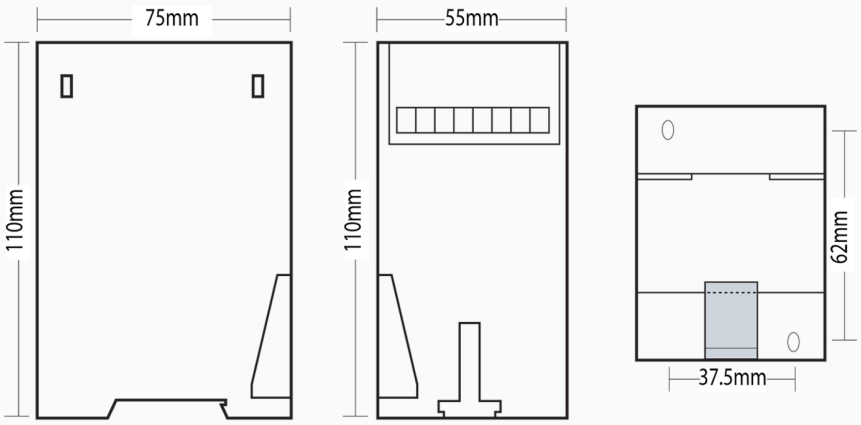

Connection Details

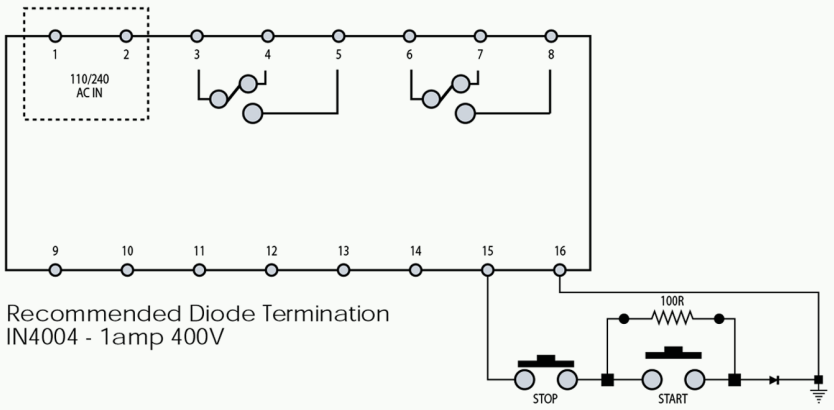

Recommended Diode Termination
IN4004 - 1amp 400V

PROUDLY AUSTRALIAN MADE AND OWNED SINCE 1945